Speed Controllers

ESL-C/ASL-C

Female Elbow

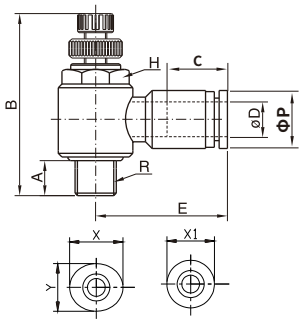

型号/ MODEL		ΦD	R	A	H	E	B	C	ΦP
限出型/Control Out	限入型/Control In								
ESL03-M3C	ESL03-M3BC	3	M3	3	8	16.4	31.2	9.3	8.1
ESL03-M5C	ESL03-M5BC	3	M5	3.5	8	16.4	31.7	9.3	8.1
ESL04-M3C	ESL04-M3BC	4	M3	3	8	16.7	31.2	12	8.1
ESL04-M5C	ESL04-M5BC	4	M5	3.5	8	16.7	31.7	12	8.1
ESL06-M3C	ESL06-M3BC	6	M3	3	8	18.1	31.2	12.4	10.7
ESL06-M5C	ESL06-M5BC	6	M5	3.5	8	18.1	31.7	12.4	10.7