Metric Size - G Thread Fitting

EPAX-G/APAX-G
Branch Elbow

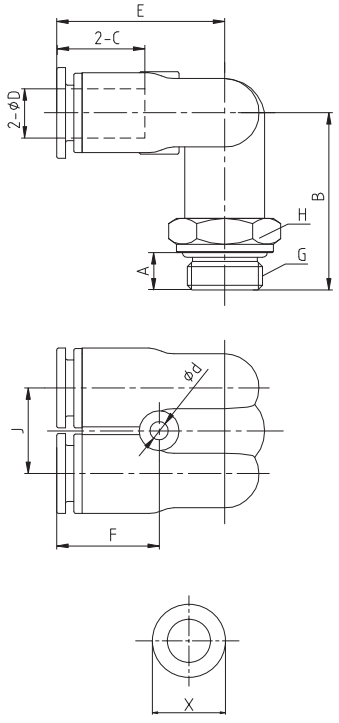

型号/ MODEL	ΦD	G	A	H	B	C	E	Φd	F	J	X
EPAX4-G01	4	G1/8	5.5	12	24	14.9	23	3.2	14	11	10
EPAX4-G02	4	G1/4	6.5	12	25.5	14.9	23	3.2	14	11	10
EPAX6-G01	6	G1/8	5.5	14	27	15.9	26	3.2	15.5	13	12
EPAX6-G02	6	G1/4	6.5	14	28.5	15.9	26	3.2	15.5	13	12
EPAX6-G03	6	G3/8	7.5	14	30	15.9	26	3.2	15.5	13	12
EPAX6-G04	6	G1/2	9.5	14	33.5	15.9	26	3.2	15.5	13	12
EPAX8-G01	8	G1/8	5.5	14	29.5	18.3	29.5	3.2	18	15	14
EPAX8-G02	8	G1/4	6.5	17	31	18.3	29.5	3.2	18	15	14
EPAX8-G03	8	G3/8	7.5	17	32.5	18.3	29.5	3.2	18	15	14
EPAX8-G04	8	G1/2	9.5	17	36	18.3	29.5	3.2	18	15	14
EPAX10-G01	10	G1/8	5.5	17	32.1	21	33.5	4.2	19.9	18	17
EPAX10-G02	10	G1/4	6.5	17	33.1	21	33.5	4.2	19.9	18	17
EPAX10-G03	10	G3/8	7.5	20	34.6	21	33.5	4.2	19.9	18	17
EPAX10-G04	10	G1/2	9.5	19	38.1	21	33.5	4.2	19.9	18	17
EPAX12-G01	12	G1/8	5.5	21	35.1	22.6	35.8	4.2	21.3	21	20
EPAX12-G02	12	G1/4	6.5	21	36.1	22.6	35.8	4.2	21.3	21	20
EPAX12-G03	12	G3/8	7.5	21	37.1	22.6	35.8	4.2	21.3	21	20
EPAX12-G04	12	G1/2	9.5	24	40.6	22.6	35.8	4.2	21.3	21	20