Metal Tube Fitting

MPL-G
Male straight

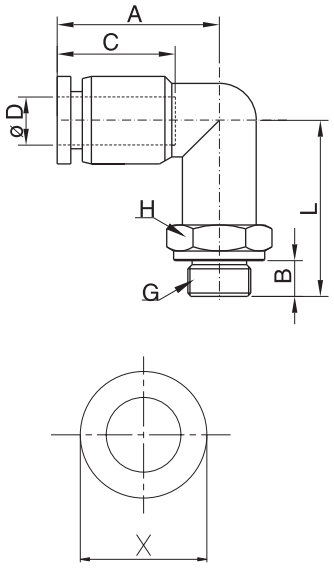

型号/ MODEL	L	A	B	C	ΦD	H	G
MPL6-G01	26.6	19.5	5.5	14.8	6	14	G1/8
MPL6-G02	28.1	19.5	6.5	14.8	6	17	G1/4
MPL8-G01	28.4	22.2	5.5	16.5	8	14	G1/8
MPL8-G02	29.9	22.2	6.5	16.5	8	17	G1/4
MPL10-G01	32.3	25.6	5.5	18.7	10	17	G1/8
MPL10-G02	33.3	25.6	6.5	18.7	10	17	G1/4
MPL10-G03	34.8	25.6	7.5	18.7	10	20	G3/8
MPL10-G04	38.3	25.6	9.5	18.7	10	24	G1/2
MPL12-G01	35.4	29.4	5.5	21.2	12	21	G1/8
MPL12-G02	36.4	29.4	6.5	21.2	12	21	G1/4
MPL12-G03	37.4	29.4	7.5	21.2	12	21	G3/8
MPL12-G04	40.7	29.4	9.5	21.2	12	24	G1/2
MPL16-G03	42.1	33.6	7.5	24	16	24	G3/8
MPL16-G04	45.1	33.6	7.5	24	16	24	G1/2